400W Studio JuniorLED

Type 8961 Tungsten
Type 8861 Tungsten (Non-DMX)
Type 8971 Daylite
Type 8871 Daylite (Non-DMX)

It's time to believe…A LED Studio Fresnel with real 2K equivalent output, and performance you can actually use. A single source, behind a glass Fresnel equals beautiful, familiar optics. Combine that with unparalleled color quality, and you have a fixture that can't be beat.

Specifications

Heads: Type 8961 Tungsten and Type 8971 Daylite

Rating: 90-250 Volts AC, 50-60Hz, 400 Watts, 4 Amps Max.
DMX Standby Draw <.20 Amps Max.

Light Source: (1) - 400 Watt Mole-Richardson Quantum Dot LED
3200K 95CRI Tungsten & 5600K 90CRI Daylight

Cable: Attached 25 ft (7.6m) Type SO., 3 Conductor, #18 AWG with NEMA 5-15 Edison
(Other plugs and wire lengths available upon request)

Switch: Thru-cord Toggle in Cable, DMX or Local Toggle in Trough

Fuse: 4 Amp Slow-Blow. Fuseholder in Trough

Dimming: Flicker Free, Direct DC Dimming
On-Board Dimmer 100% -10% (Minimal Color Shift)
DMX Dimmer 100% - 0% (Minimal Color Shift)

Control: DMX512-A In and Out. Manual DMX Address Selector

Condenser: 10 in (254mm) Borosilicate Glass Fresnel

Beam Angle: 10° to 55° Variable Spot to Flood (Includes Field)

Focusing: Rotating Knob on Front and Back

Cooling: Passive-Forced Air

Construction: Aluminum and Steel with Interlocking Channels

Yoke: Cast Aluminum w/Standard $1^{1}/_{8}$ in (29mm) Pin

Compliance: RoHS. CE, UL, CSA Pending

IP Rating: 30

Finish: Textured Black Powder Epoxy Coat. (Other Colors Available)

Size: 17 in/432mm(d) x 17 in/432mm(w) x $21^{1}/_{2}$ in/546mm(h)

Head Weight: 24lbs/11.11kg (Head Only)
27.5lbs/12.25kg (Head with 25ft/7.6m cable)

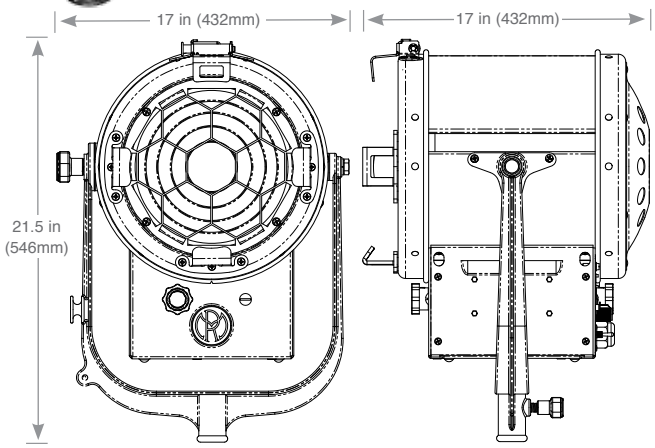

Accessories	Item Number
2-Way Barn Door (2 Leaf)	41256
4-Way BabyLED Barn Door (4 Leaf)	89685
4-Way Barn Door (8 Leaf)	412137
Moledisc Diffuser Frame (12 in/305mm)	200053A
Snoot (Set of 3)	41259
Molesnoot (Five-in-one) Apertures: 3 in, 4 in, 5 in and 7 in (50mm, 60mm, 70mm and 89mm)	412195
Half Single Scrim—Stainless Steel (12 in/305mm)	412240S
Half Double Scrim—Stainless Steel (12 in/305mm)	412240D
Single Scrim—Stainless Steel (12 in/305mm)	412241S
Double Scrim—Stainless Steel (12 in/305mm)	412241D
Scrim Bag	G138
400 Watt Studio JuniorLED Retrofit Kit, Tungsten	896110
400 Watt Studio JuniorLED Retrofit Kit, Daylite	897110

Preliminary Performance Data

Using (1) 400 Watt Mole-Richardson QD LED.

Distance Feet (Meters)	Light Intensity Maximum **Flood** Foot Candles (Lux) Daylite	Light Intensity Maximum **Flood** Foot Candles (Lux) Tungsten	Light Intensity Maximum **Spot** Foot Candles (Lux) Daylite	Light Intensity Maximum **Spot** Foot Candles (Lux) Tungsten	Beam Diameter Maximum **Flood** Feet (Meters)	Beam Diameter Maximum **Spot** Feet (Meters)
5 (1.5)	1,300(13,993)	1,200(12,916)	3,100 (33,368)	3,000 (32,291)	— (—)	— (—)
10 (3)	397 (4,273)	380 (4,090)	990 (10,656)	900 (9,687)	9.0 (2.7)	3.0 (0.9)
15 (4.6)	155 (1,668)	145 (1,560)	450 (4,843)	420 (4,520)	— (—)	— (—)

Light tapers smoothly at edge of field. Dimensions listed define flat area boundaries at which the intensities are approximately 50% of tabulated intensities at beam center.

Mole-Richardson Co.
Mole-Richardson Co., 937 North Sycamore Avenue, Hollywood, California 90038 U.S.A.
Tel. +1-323-851-0111 • Fax. +1-323-851-5593 • E-Mail: info@mole.com • Web: http://www.mole.com
© 2013 Mole-Richardson Co., Hollywood, CA

Mole LED Fresnel™

If there is one product synonymous with Mole-Richardson Co., it's the iconic Motion Picture Fresnel. Built in Hollywood California since 1936, the studio Fresnel remains the back-bone of professional lighting for the film, television and broadcast industries. Relatively unchanged since its origin, the studio Fresnel rarely saw dramatic improvements...until now.

Introducing the MoleLED Fresnels. A design familiar to generations of lighting professionals is now loaded with state of the art electronics and the latest LED technology. These revolutionary fixtures use a proprietary Quantum Dot LED developed and produced by Mole to replicate film and television 3200K Tungsten and 5600K Daylight exactly.

High-output, with unparalleled color quality and a borosilicate glass Fresnel lens, the MoleLED Fresnels perform identically to an incandescent or HMI Fresnel fixture. In addition, Mole added features like a universal power supply, built-in local dimming as well as on-board DMX dimming. Now, you are no longer tied to an external dimming system or any one voltage.

In an industry inundated with mass produced, eco-friendly products, the MoleLED Fresnels are truly a hybrid of hand crafted quality and the most advanced solid state lighting technology available. From the ground up, the MoleLED Fresnels are designed, engineered and built in the USA for professionals everywhere.

Product Benefits

- An 80% reduction in energy consumption
- Flicker-Free dimming with little to no color shift.
- No need for external dimming systems.
- No direct IR or radiant heat from Fresnel.
- And so much more...

Retro-Fit Kits

Realizing a need for our industry to further reduce, reuse and recycle, Mole is also offering simple retro-fit kits to convert existing legacy Tweenie, Baby and 8" Junior Solarspots to new Tungsten or Daylight MoleLED™ Fresnels.

Control Panel

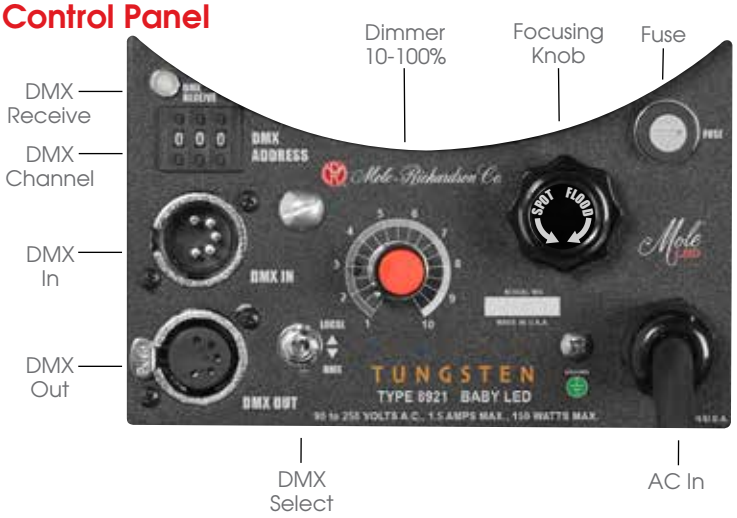

The Technology

The MoleLED Fresnels are powered by a new, proprietary Mole-Richardson Co. Quantum Dot chip on-board LED module. The benefit of QD LED technology is the ability to specifically tune the visible wavelength at the nano scale which, in this case, allows for precise adjustment of the red spectrum without impacting the overall light output of the LED. This Patent Pending LED board represents the first time QD LED's are being used in the film, television and broadcast industries.

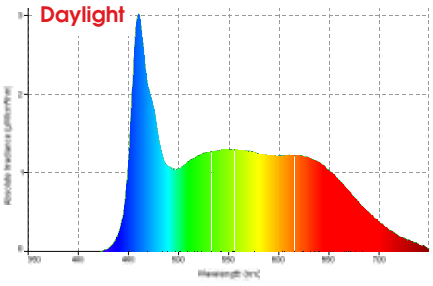

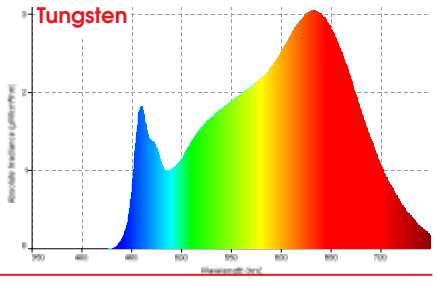

Mole-Richardson Co.
Mole-Richardson Co., 937 North Sycamore Avenue, Hollywood, California 90038 U.S.A.
Tel. +1-323-851-0111 • Fax. +1-323-851-5593 • E-Mail: info@mole.com • Web: http://www.mole.com
© 2013 Mole-Richardson Co., Hollywood, CA