PHX 250W LED ZOOM SPOT
250 Watt LED

The 15°-35° and 30°-55° PHX LED Zoom ellipsoidals are state of the art luminaires in function, style, and efficiency. These ellipsoidals have been designed and engineered with a number of innovative details and features enhancing versatility and efficiency without sacrificing performance.

A diverse line of LED choices are available including RGBA, RGBW, 3000K, 5600K, and tunable white 3000K/5600K versions. A 360° rotating barrel help you keep the artistic part of your fixtures' focus intact with virtually no light leak.

These new and innovative options are what makes the PHX LED ellipsoidals ideal for theatres, special events, television studios, or any location where superior, energy efficient lighting performance is required.

PHX 250W LED Zoom Spot

Product Features:

- 360-degree rotating barrel
- Heat resistant Plano-Convex lensing
- Die-cast aluminum and sheet metal fabrication
- Color frame, C-Clamp, soft focus pattern holder, safety cable and 5 foot PowerCON included
- PowerCON in and out for daisy-chaining units - Up to 8 fixtures (20A Max) may be linked
- Available standard in Black or White
- Positive locking double-clutch fixture body
- Wide accessory slot with sliding cover for motorized pattern devices or optional iris
- Yoke made from rigid flat steel with dual locking handles, two mounting positions and indexed tilt angle markings
- DMX512 in/thru via 5-pin XLR connector
- Multiple on-board control options: RGB(A/W)color fades and strobes
- Console free Master/Slave mode
- 8-bit or 16-bit virtual dimming engine provides smooth, high quality fades and minimizes color shift during dimming
- User friendly control interface
- Carries standard three year Altman Warranty
- 28.25 lbs. (12.81 kg.)
- cETLus listed and CE marked (IP20 Rated for indoor use)
- Assembled in the USA

ALTMAN Lighting
BRINGING IMAGINATION TO LIGHT

PROUDLY ASSEMBLED IN THE USA

Photometric Performance - PHX 250W RGBA with 15-35 Degree Zoom Lens

Narrow

	Throw Distance (d)	10' 3.05m	15' 4.57m	20' 6.09m	25' 7.62m	30' 9.14m	35' 10.67m	40' 12.19m	45' 13.72m	50' 15.24m	55' 16.76m
	Beam Size Diameter	2' - 9" 0.85m	3'-11" 1.19m	5' 1.54m	6'- 2" 1.89m	7'- 4" 2.24m	8'- 6" 2.58m	9' - 7" 2.93m	10' - 9" 3.28m	11'- 11" 3.63m	13' 3.97m
Full on RGBA	Illuminance = fc (Illuminance = lux)	984.20 (10,589.99)	453.13 (4,875.71)	254.89 (2,742.59)	163.13 (1,755.26)	113.28 (1,218.93)	83.23 (895.54)	63.72 (685.65)	50.35 (541.75)	40.78 (438.81)	33.70 (362.66)
Red	Illuminance = fc (Illuminance = lux)	273.89 (2,947.00)	128.24 (1,379.91)	72.14 (776.19)	46.17 (496.77)	32.06 (344.98)	23.56 (253.45)	18.03 (194.05)	14.25 (153.32)	11.54 (124.19)	9.54 (102.64)
Green	Illuminance = fc (Illuminance = lux)	513.95 (5,530.10)	241.74 (2,601.10)	135.98 (1,463.12)	87.03 (936.39)	60.44 (650.28)	44.40 (477.75)	33.99 (365.78)	26.86 (289.01)	21.76 (234.09)	17.98 (193.47)
Blue	Illuminance = fc (Illuminance = lux)	108.30 (1,165.31)	49.20 (529.43)	27.68 (297.80)	17.71 (190.59)	12.30 (132.36)	9.04 (97.24)	6.92 (74.45)	5.47 (58.83)	4.43 (47.65)	3.66 (39.38)
Amber	Illuminance = fc (Illuminance = lux)	174.80 (1,880.85)	77.94 (838.59)	43.84 (471.71)	28.06 (301.89)	19.48 (209.65)	14.32 (154.03)	10.96 (117.93)	8.66 (93.18)	7.01 (75.47)	5.79 (62.38)

Medium

	Throw Distance (d)	10' 3.05m	15' 4.57m	20' 6.09m	25' 7.62m	30' 9.14m	35' 10.67m	40' 12.19m	45' 13.72m	50' 15.24m	55' 16.76m
	Beam Size Diameter	4' - 3" 1.30m	6' - 2" 1.88m	8' - 1" 2.46m	9'- 11" 3.03m	11' - 10" 3.61m	13' - 9" 4.18m	15' - 7" 4.76m	17' - 6" 5.34m	19' - 5" 5.91m	21' - 3" 6.49m
Full on RGBA	Illuminance = fc (Illuminance = lux)	406.60 (4,375.02)	181.28 (1,950.53)	101.97 (1,097.17)	65.26 (702.19)	45.32 (487.63)	33.29 (358.26)	25.49 (274.29)	20.14 (216.73)	16.32 (175.55)	13.48 (145.08)
Red	Illuminance = fc (Illuminance = lux)	117.80 (1,267.53)	54.49 (586.37)	30.65 (329.83)	19.62 (211.09)	13.62 (146.59)	10.01 (107.70)	7.66 (82.46)	6.05 (65.15)	4.91 (52.77)	4.05 (43.61)
Green	Illuminance = fc (Illuminance = lux)	216.13 (2,325.51)	100.21 (1,078.24)	56.37 (606.51)	36.08 (388.17)	25.05 (269.56)	18.41 (198.04)	14.09 (151.63)	11.13 (119.80)	9.02 (97.04)	7.45 (80.19)
Blue	Illuminance = fc (Illuminance = lux)	44.65 (480.43)	19.93 (214.44)	11.21 (120.62)	7.17 (77.19)	4.98 (53.61)	3.66 (39.39)	2.80 (30.16)	2.21 (23.83)	1.79 (19.29)	1.48 (15.95)
Amber	Illuminance = fc (Illuminance = lux)	71.35 (767.67)	31.73 (341.37)	17.85 (192.02)	11.42 (122.89)	7.93 (85.34)	5.83 (62.70)	4.46 (48.01)	3.53 (37.93)	2.86 (30.72)	2.36 (25.39)

Wide

	Throw Distance (d)	10' 3.048m	15' 4.572m	20' 6.096m	25' 7.62m	30' 9.144m	35' 10.668m	40' 12.192m	45' 13.716m	50' 15.24m	55' 16.764m
	Beam Size Diameter	5' - 10" 1.79m	8' - 6" 2.60m	11' - 3" 3.42m	13' - 11" 4.24m	16' - 7" 5.05m	19' - 3" 5.87m	21' - 11" 6.69m	24' - 7" 7.50m	27' - 3" 8.32m	29' - 11" 9.14m
Full on RGBA	Illuminance = fc (Illuminance = lux)	245.86 (2,645.45)	112.99 (2,645.45)	63.56 (683.91)	40.68 (437.70)	28.25 (303.96)	20.75 (223.32)	15.89 (170.98)	12.55 (135.09)	10.17 (109.42)	8.41 (90.43)
Red	Illuminance = fc (Illuminance = lux)	72.87 (784.03)	34.23 (368.29)	19.25 (207.17)	12.32 (132.59)	8.56 (92.07)	6.29 (67.65)	4.81 (51.79)	3.80 (40.92)	3.08 (33.15)	2.55 (27.39)
Green	Illuminance = fc (Illuminance = lux)	130.34 (1,402.46)	61.03 (656.64)	34.33 (369.36)	21.97 (236.39)	15.26 (164.16)	11.21 (164.16)	8.58 (92.34)	6.78 (72.96)	5.49 (59.09)	4.54 (48.84)
Blue	Illuminance = fc (Illuminance = lux)	26.13 (281.11)	12.72 (136.90)	7.16 (77.01)	4.58 (49.28)	3.18 (34.23)	2.34 (25.15)	1.79 (19.25)	1.41 (15.21)	1.15 (12.32)	0.95 (10.18)
Amber	Illuminance = fc (Illuminance = lux)	43.99 (473.28)	19.66 (211.50)	11.06 (118.97)	7.08 (76.14)	4.91 (52.88)	3.61 (38.85)	2.76 (29.74)	2.18 (23.50)	1.77 (19.04)	1.46 (15.73)

ALTMAN Lighting
BRINGING IMAGINATION TO LIGHT

Photometric Performance - PHX 250W RGBA with 30-55 Degree Zoom Lens

Narrow

	Throw Distance (d)	10' 3.05m	15' 4.57m	20' 6.09m	25' 7.62m	30' 9.14m	35' 10.67m	40' 12.19m	45' 13.72m	50' 15.24m	55' 16.76m
	Beam Size Diameter	5' - 6" 1.69m	8' 2.45m	10' - 7" 3.22m	13' - 1" 3.98m	15' - 7" 4.75m	18 - 1" 5.52m	20' - 7" 6.28m	23' - 2" 7.05m	25' - 8" 7.82m	28' - 2" 8.58m
Full on RGBA	Illuminance = fc (Illuminance = lux)	293.63 (3,160.58)	130.50 (1,404.70)	73.41 (790.15)	46.98 (505.69)	32.63 (351.18)	23.97 (258.01)	18.35 (197.54)	14.50 (156.08)	11.75 (126.42)	9.71 (104.48)
Red	Illuminance = fc (Illuminance = lux)	93.99 (1,011.67)	41.77 (449.63)	23.50 (252.92)	15.04 (161.87)	10.44 (112.41)	7.67 (82.59)	5.87 (63.23)	4.64 (49.96)	3.76 (40.47)	3.11 (33.44)
Green	Illuminance = fc (Illuminance = lux)	169.48 (1,824.28)	75.32 (810.79)	42.37 (456.07)	27.12 (291.88)	18.83 (202.70)	13.84 (148.92)	10.59 (114.02)	8.37 (90.09)	6.78 (72.97)	5.60 (60.31)
Blue	Illuminance = fc (Illuminance = lux)	33.94 (365.32)	15.08 (162.37)	8.48 (91.33)	5.43 (58.45)	3.77 (40.59)	2.77 (29.82)	2.12 (22.83)	1.68 (18.04)	1.36 (14.61)	1.12 (12.08)
Amber	Illuminance = fc (Illuminance = lux)	51.89 (558.55)	23.06 (248.25)	12.97 (139.64)	8.30 (89.37)	5.77 (62.06)	4.24 (45.60)	3.24 (34.91)	2.56 (27.58)	2.08 (22.34)	1.72 (18.46)

Medium

	Throw Distance (d)	10' 3.05m	15' 4.57m	20' 6.09m	25' 7.62m	30' 9.14m	35' 10.67m	40' 12.19m	45' 13.72m	50' 15.24m	55' 16.76m
	Beam Size Diameter	7' - 1" 2.16m	10' - 5" 3.17m	13 - 8" 4.17m	17' 5.18m	20' - 3" 6.18m	23' - 7" 7.19m	26 - 11" 8.19m	30' - 2" 9.20m	33' - 6" 10.20m	36' - 9" 11.21m
Full on RGBA	Illuminance = fc (Illuminance = lux)	195.31 (2,102.32)	86.81 (934.37)	48.83 (525.58)	31.25 (336.37)	21.70 (233.59)	15.94 (171.62)	12.21 (131.40)	9.65 (103.82)	7.81 (84.09)	6.46 (69.50)
Red	Illuminance = fc (Illuminance = lux)	61.14 (658.05)	27.17 (292.47)	15.28 (194.51)	9.78 (105.29)	6.79 (73.12)	4.99 (53.72)	3.82 (41.13)	3.02 (32.50)	2.45 (26.32)	2.02 (21.75)
Green	Illuminance = fc (Illuminance = lux)	110.09 (1,184.96)	48.93 (526.65)	27.52 (296.24)	17.61 (189.59)	12.23 (131.66)	8.99 (96.73)	6.88 (74.06)	5.44 (58.52)	4.40 (47.40)	3.64 (39.17)
Blue	Illuminance = fc (Illuminance = lux)	22.84 (249.89)	10.15 (109.29)	5.71 (61.47)	3.66 (39.34)	2.54 (27.32)	1.86 (20.07)	1.43 (15.37)	1.13 (12.14)	0.91 (9.84)	0.76 (8.13)
Amber	Illuminance = fc (Illuminance = lux)	33.58 (361.50)	14.93 (160.67)	8.40 (90.38)	5.37 (57.84)	3.73 (40.17)	2.74 (29.51)	2.10 (22.59)	1.66 (17.85)	1.34 (14.46)	1.11 (11.95)

Wide

	Throw Distance (d)	10' 3.048m	15' 4.572m	20' 6.096m	25' 7.62m	30' 9.144m	35' 10.668m	40' 12.192m	45' 13.716m	50' 15.24m	55' 16.764m
	Beam Size Diameter	8' - 10" 2.68m	13' 3.95m	17.1' 5.22m	21' - 3" 6.48m	25' - 5" 7.75m	29' - 7" 9.01m	33' - 9" 10.28m	37' - 10" 11.54m	42' 12.81m	46' - 2" 14.08m
Full on RGBA	Illuminance = fc (Illuminance = lux)	139.34 (1,499.86)	61.93 (666.60)	34.84 (374.96)	22.29 (239.98)	15.48 (166.65)	11.37 (122.44)	8.71 (93.74)	6.88 (74.07)	5.57 (59.99)	4.61 (49.58)
Red	Illuminance = fc (Illuminance = lux)	44.38 (477.73)	19.73 (212.33)	11.10 (119.43)	7.10 (76.44)	4.93 (53.08)	3.62 (39.00)	2.77 (29.86)	2.19 (23.59)	1.78 (19.11)	1.47 (15.79)
Green	Illuminance = fc (Illuminance = lux)	78.54 (845.40)	34.91 (375.73)	19.64 (211.35)	12.57 (135.26)	8.73 (93.93)	6.41 (69.01)	4.91 (52.84)	3.88 (41.75)	3.14 (33.82)	2.60 (27.95)
Blue	Illuminance = fc (Illuminance = lux)	16.32 (175.64)	7.25 (78.06)	4.08 (43.91)	2.61 (28.10)	1.81 (19.52)	1.33 (14.34)	1.02 (10.98)	0.81 (8.67)	0.65 (7.03)	0.54 (5.81)
Amber	Illuminance = fc (Illuminance = lux)	24.22 (260.71)	10.76 (115.87)	6.06 (65.18)	3.88 (41.71)	2.69 (28.97)	1.98 (21.28)	1.51 (16.29)	1.20 (12.87)	0.97 (10.43)	0.80 (8.62)

Photometric Performance - PHX 250W RGBW with 15-35 Degree Zoom Lens

Narrow

	Throw Distance (d)	10' 3.05m	15' 4.57m	20' 6.09m	25' 7.62m	30' 9.14m	35' 10.67m	40' 12.19m	45' 13.72m	50' 15.24m	55' 16.76m
	Beam Size Diameter	2' - 9" 0.85m	3' - 11" 1.19m	5' 1.54m	6' - 2" 1.89m	7' - 4" 2.24m	8' - 6" 2.58m	9' - 7" 2.93m	10' - 9" 3.28m	11' - 11" 3.63m	13' 3.97m
Full on RGBW	Illuminance = fc (Illuminance = lux)	1,324.30 (14,249.47)	615.32 (6,620.88)	346.12 (3,724.25)	221.52 (2,383.52)	153.83 (1,655.22)	113.02 (1,216.08)	86.53 (931.06)	68.37 (735.65)	55.38 (595.88)	45.77 (492.46)
Red	Illuminance = fc (Illuminance = lux)	273.89 (2,947.00)	128.24 (1,379.91)	72.14 (776.19)	46.17 (496.77)	32.06 (344.98)	23.56 (253.45)	18.03 (194.05)	14.25 (153.32)	11.54 (124.19)	9.54 (102.64)
Green	Illuminance = fc (Illuminance = lux)	513.95 (5,530.10)	241.74 (2,601.10)	135.98 (1,463.12)	87.03 (936.39)	60.44 (650.28)	44.40 (477.75)	33.99 (365.78)	26.86 (289.01)	21.76 (234.09)	17.98 (193.47)
Blue	Illuminance = fc (Illuminance = lux)	108.30 (1,165.31)	49.20 (529.43)	27.68 (297.80)	17.71 (190.59)	12.30 (132.36)	9.04 (97.24)	6.92 (74.45)	5.47 (58.83)	4.43 (47.65)	3.66 (39.38)
White	Illuminance = fc (Illuminance = lux)	483.55 (5,202.99)	224.74 (2,418.17)	126.41 (1,360.22)	80.91 (870.54)	56.18 (604.54)	41.28 (444.15)	31.60 (340.06)	24.97 (268.69)	20.23 (217.64)	16.72 (179.86)

Medium

	Throw Distance (d)	10' 3.05m	15' 4.57m	20' 6.09m	25' 7.62m	30' 9.14m	35' 10.67m	40' 12.19m	45' 13.72m	50' 15.24m	55' 16.76m
	Beam Size Diameter	4' - 3" 1.30m	6' - 2" 1.88m	8' 2.46m	9' - 11" 3.03m	11' - 10" 3.61m	13' - 9" 4.18m	15' - 7" 4.76m	17' - 6" 5.34m	19' - 5" 5.91m	21' - 3" 6.49m
Full on RGBW	Illuminance = fc (Illuminance = lux)	554.33 (5,964.54)	249.28 (2,682.28)	140.22 (1,508.78)	89.74 (965.62)	62.32 (670.57)	45.79 (492.66)	35.06 (377.19)	27.69 (298.03)	22.44 (241.41)	18.54 (199.51)
Red	Illuminance = fc (Illuminance = lux)	117.80 (1,267.53)	54.49 (586.37)	30.65 (329.83)	19.62 (211.09)	13.62 (146.59)	10.01 (107.70)	7.66 (82.46)	6.06 (65.15)	4.91 (52.77)	4.05 (43.61)
Green	Illuminance = fc (Illuminance = lux)	216.13 (2,325.51)	100.21 (1,078.24)	56.37 (606.51)	36.08 (388.17)	25.05 (269.56)	18.41 (198.04)	14.09 (151.63)	11.13 (119.80)	9.02 (97.04)	7.45 (80.19)
Blue	Illuminance = fc (Illuminance = lux)	44.65 (480.43)	19.93 (214.44)	11.21 (120.62)	7.17 (77.19)	4.98 (53.61)	3.66 (39.39)	2.80 (30.16)	2.21 (23.83)	1.79 (19.29)	1.48 (15.95)
White	Illuminance = fc (Illuminance = lux)	202.35 (2,177.29)	93.12 (1,001.92)	52.38 (563.58)	33.52 (360.69)	23.28 (250.48)	17.10 (184.03)	13.09 (140.89)	10.35 (111.32)	8.38 (90.17)	6.93 (74.52)

Wide

	Throw Distance (d)	10' 3.05m	15' 4.57m	20' 6.09m	25' 7.62m	30' 9.14m	35' 10.67m	40' 12.19m	45' 13.72m	50' 15.24m	55' 16.76m
	Beam Size Diameter	5' - 10" 1.79m	8' - 6" 2.60m	11' - 2" 3.42m	13' - 11" 4.24m	16' - 7" 5.05m	19' - 3" 5.87m	21' - 11" 6.69m	24' - 7" 7.50m	27' - 3" 8.32m	29' - 11" 9.14m
Full on RGBW	Illuminance = fc (Illuminance = lux)	329.65 (3,547.03)	159.09 (1,711.86)	89.49 (1,711.86)	57.27 (616.27)	39.77 (427.97)	29.22 (314.42)	22.37 (240.73)	17.68 (190.21)	14.32 (154.07)	11.83 (127.33)
Red	Illuminance = fc (Illuminance = lux)	72.87 (784.03)	34.23 (368.29)	19.25 (207.17)	12.32 (132.59)	8.56 (92.07)	6.29 (67.65)	4.81 (51.79)	3.80 (40.92)	3.08 (33.15)	2.55 (27.39)
Green	Illuminance = fc (Illuminance = lux)	130.34 (1,402.46)	61.03 (656.64)	34.33 (369.36)	21.97 (236.39)	15.26 (164.16)	11.21 (120.61)	8.58 (92.34)	6.78 (72.96)	5.49 (59.09)	4.54 (48.84)
Blue	Illuminance = fc (Illuminance = lux)	26.13 (281.11)	12.72 (136.90)	7.16 (77.01)	4.58 (49.28)	3.18 (34.23)	2.34 (25.15)	1.79 (19.25)	1.41 (15.21)	1.15 (12.32)	0.95 (10.18)
White	Illuminance = fc (Illuminance = lux)	122.27 (1,315.57)	57.42 (617.87)	32.30 (347.55)	20.67 (222.43)	14.36 (154.47)	10.55 (113.49)	8.08 (86.89)	6.38 (68.65)	5.17 (55.61)	4.27 (45.96)

Photometric Performance - PHX 250W RGBW with 30-55 Degree Zoom Lens

Narrow

	Throw Distance (d)	10' 3.05m	15' 4.57m	20' 6.09m	25' 7.62m	30' 9.14m	35' 10.67m	40' 12.19m	45' 13.72m	50' 15.24m	55' 16.76m
	Beam Size Diameter	5' - 6" 1.69m	8' 2.45m	10' - 7" 3.22m	13' - 1" 3.98m	15' - 7" 4.75m	18 - 1" 5.52m	20' - 7" 6.28m	23' - 2" 7.05m	25' - 8" 7.82m	28' - 2" 8.58m
Full on RGBW	Illuminance = fc (Illuminance = lux)	436.00 (4,693.01)	193.78 (2,085.78)	109.00 (1,173.25)	69.76 (750.88)	48.44 (521.45)	35.59 (383.10)	27.25 (293.31)	21.53 (231.75)	17.44 (187.72)	14.41 (155.14)
Red	Illuminance = fc (Illuminance = lux)	93.99 (1,011.67)	41.77 (449.63)	23.50 (252.92)	15.04 (161.87)	10.44 (112.41)	7.67 (82.59)	5.87 (63.23)	4.64 (49.96)	3.76 (40.47)	3.11 (33.44)
Green	Illuminance = fc (Illuminance = lux)	169.48 (1,824.28)	75.32 (810.79)	42.37 (456.07)	27.12 (291.88)	18.83 (202.70)	13.84 (148.92)	10.59 (114.02)	8.37 (90.09)	6.78 (72.97)	5.60 (60.31)
Blue	Illuminance = fc (Illuminance = lux)	33.94 (365.32)	15.08 (162.37)	8.48 (91.33)	5.43 (58.45)	3.77 (40.59)	2.77 (29.82)	2.12 (22.83)	1.68 (18.04)	1.36 (14.61)	1.12 (12.08)
White	Illuminance = fc (Illuminance = lux)	160.34 (1,725.92)	71.26 (767.08)	40.09 (431.48)	25.65 (276.15)	17.82 (191.77)	13.09 (140.89)	10.02 (107.87)	7.92 (85.23)	6.41 (69.04)	5.30 (57.06)

Medium

	Throw Distance (d)	10' 3.05m	15' 4.57m	20' 6.09m	25' 7.62m	30' 9.14m	35' 10.67m	40' 12.19m	45' 13.72m	50' 15.24m	55' 16.76m
	Beam Size Diameter	7' - 1" 2.16m	10' - 5" 3.17m	13 - 8" 4.17m	17' 5.18m	20' - 3" 6.18m	23' - 7" 7.19m	26 - 11" 8.19m	30' - 2" 9.20m	33' - 6" 10.20m	36' - 9" 11.21m
Full on RGBW	Illuminance = fc (Illuminance = lux)	290.01 (3,121.65)	128.89 (1,387.40)	72.50 (780.41)	46.40 (499.46)	32.22 (346.85)	23.67 (254.83)	18.13 (195.10)	14.32 (154.16)	11.60 (124.87)	9.59 (103.20)
Red	Illuminance = fc (Illuminance = lux)	61.14 (658.05)	27.17 (292.47)	15.28 (194.51)	9.78 (105.29)	6.79 (73.12)	4.99 (53.72)	3.82 (41.13)	3.02 (32.50)	2.45 (26.32)	2.02 (21.75)
Green	Illuminance = fc (Illuminance = lux)	110.09 (1,184.96)	48.93 (526.65)	27.52 (296.24)	17.61 (189.59)	12.23 (131.66)	8.99 (96.73)	6.88 (74.06)	5.44 (58.52)	4.40 (47.40)	3.64 (39.17)
Blue	Illuminance = fc (Illuminance = lux)	22.84 (249.89)	10.15 (109.29)	5.71 (61.47)	3.66 (39.34)	2.54 (27.32)	1.86 (20.07)	1.43 (15.37)	1.13 (12.14)	0.91 (9.84)	0.76 (8.13)
White	Illuminance = fc (Illuminance = lux)	103.78 (1,117.05)	46.12 (496.47)	25.94 (279.26)	16.60 (178.73)	11.53 (124.12)	8.47 (91.19)	6.49 (69.82)	5.12 (55.16)	4.15 (44.68)	3.43 (36.93)

Wide

	Throw Distance (d)	10' 3.05m	15' 4.57m	20' 6.09m	25' 7.62m	30' 9.14m	35' 10.67m	40' 12.19m	45' 13.72m	50' 15.24m	55' 16.764m
	Beam Size Diameter	8' - 10" 2.68m	13' 3.95m	17.1' 5.22m	21' - 3" 6.48m	25' - 5" 7.75m	29' - 7" 9.01m	33' - 9" 10.28m	37' - 10" 11.54m	42' 12.81m	46' - 2" 14.08m
Full on RGBW	Illuminance = fc (Illuminance = lux)	206.90 (2,227.07)	91.96 (989.81)	51.73 (556.77)	33.10 (356.33)	22.99 (247.45)	16.89 (181.80)	12.93 (139.19)	10.22 (109.98)	8.28 (89.08)	6.84 (73.62)
Red	Illuminance = fc (Illuminance = lux)	44.38 (477.73)	19.73 (212.33)	11.10 (119.43)	7.10 (76.44)	4.93 (53.08)	3.62 (39.00)	2.77 (29.86)	2.19 (23.59)	1.78 (19.11)	1.47 (15.79)
Green	Illuminance = fc (Illuminance = lux)	78.54 (845.40)	34.91 (375.73)	19.64 (211.35)	12.57 (135.26)	8.73 (93.93)	6.41 (69.01)	4.91 (52.84)	3.88 (41.75)	3.14 (33.82)	2.60 (27.95)
Blue	Illuminance = fc (Illuminance = lux)	16.32 (175.64)	7.25 (78.06)	4.08 (43.91)	2.61 (28.10)	1.81 (19.52)	1.33 (14.34)	1.02 (10.98)	0.81 (8.67)	0.65 (7.03)	0.54 (5.81)
White	Illuminance = fc (Illuminance = lux)	74.84 (805.59)	33.26 (358.04)	18.71 (201.42)	11.97 (128.89)	8.32 (89.51)	6.11 (65.76)	4.68 (50.35)	3.70 (39.78)	2.99 (32.22)	2.47 (26.63)

Photometric Performance - PHX 250W 3000K with 15-35 Degree Zoom Lens

Narrow

Throw Distance (d)	10' 3.05m	15' 4.57m	20' 6.09m	25' 7.62m	30' 9.14m	35' 10.67m	40' 12.19m	45' 13.72m	50' 15.24m	55' 16.76m
Beam Size Diameter	2' - 9" 0.85m	3'-11" 1.19m	5' 1.54m	6'- 2" 1.89m	7'- 4" 2.24m	8'- 6" 2.58m	9' - 7" 2.93m	10' - 9" 3.28m	11'- 11" 3.63m	13' 3.97m
Illuminance = fc (Illuminance = lux)	2,085.25 (22,437.29)	966.84 (10,403.25)	543.85 (5,851.83)	348.06 (3,745.17)	241.71 (2,600.81)	177.58 (1,910.80)	135.96 (1,462.96)	107.43 (1,155.92)	87.02 (936.29)	71.91 (773.79)

Medium

Throw Distance (d)	10' 3.05m	15' 4.57m	20' 6.09m	25' 7.62m	30' 9.14m	35' 10.67m	40' 12.19m	45' 13.72m	50' 15.24m	55' 16.76m
Beam Size Diameter	4' - 3" 1.30m	6' - 2" 1.88m	8' - 1" 2.46m	9'- 11" 3.03m	11' - 10" 3.61m	13' - 9" 4.18m	15' - 7" 4.76m	17' - 6" 5.34m	19' - 5" 5.91m	21' - 3" 6.49m
Illuminance = fc (Illuminance = lux)	874.0 (9,404.24)	400.26 (4,306.75)	225.14 (2,422.55)	144.09 (1,550.43)	100.06 (1,076.69)	73.52 (791.04)	56.29 (605.64)	44.47 (478.53)	36.02 (387.61)	29.77 (320.34)

Wide

Throw Distance (d)	10' 3.05m	15' 4.57m	20' 6.09m	25' 7.62m	30' 9.14m	35' 10.67m	40' 12.19m	45' 13.72m	50' 15.24m	55' 16.76m
Beam Size Diameter	5' - 10" 1.79m	8' - 6" 2.60m	11' - 2" 3.42m	13' - 11" 4.24m	16' - 7" 5.05m	19' - 3" 5.87m	21' - 11" 6.69m	24' - 7" 7.50m	27' - 3" 8.32m	29' - 11" 9.14m
Illuminance = fc (Illuminance = lux)	496.85 (5,346.11)	233.81 (2,515.78)	131.52 (1,415.13)	84.17 (905.68)	58.45 (628.94)	42.94 (462.08)	32.88 (353.78)	25.98 (279.53)	21.04 (226.42)	17.39 (187.12)

Photometric Performance - PHX 250W 3000K with 30-55 Degree Zoom Lens

Narrow

Throw Distance (d)	10' 3.05m	15' 4.57m	20' 6.09m	25' 7.62m	30' 9.14m	35' 10.67m	40' 12.19m	45' 13.72m	50' 15.24m	55' 16.76m
Beam Size Diameter	5' - 6" 1.69m	8' 2.45m	10' - 7" 3.22m	13' - 1" 3.98m	15' - 7" 4.75m	18 - 1" 5.52m	20' - 7" 6.28m	23' - 2" 7.05m	25' - 8" 7.82m	28' - 2" 8.58m
Illuminance = fc (Illuminance = lux)	616.09 (6,631.53)	273.82 (2,947.35)	154.02 (1,657.88)	98.57 (1,061.05)	68.45 (736.84)	50.29 (541.35)	38.51 (414.47)	30.42 (327.48)	24.64 (265.26)	20.37 (219.22)

Medium

Throw Distance (d)	10' 3.05m	15' 4.57m	20' 6.09m	25' 7.62m	30' 9.14m	35' 10.67m	40' 12.19m	45' 13.72m	50' 15.24m	55' 16.76m
Beam Size Diameter	7' - 1" 2.16m	10' - 5" 3.17m	13 - 8" 4.17m	17' 5.18m	20' - 3" 6.18m	23' - 7" 7.19m	26 - 11" 8.19m	30' - 2" 9.20m	33' - 6" 10.20m	36' - 9" 11.21m
Illuminance = fc (Illuminance = lux)	409.80 (4,411.09)	182.14 (1,960.49)	102.45 (1,102.77)	65.57 (705.78)	45.53 (490.12)	33.45 (360.09)	25.61 (275.69)	20.24 (217.83)	16.39 (176.44)	13.55 (145.82)

Wide

Throw Distance (d)	10' 3.05m	15' 4.57m	20' 6.09m	25' 7.62m	30' 9.14m	35' 10.67m	40' 12.19m	45' 13.72m	50' 15.24m	55' 16.764m
Beam Size Diameter	8' - 10" 2.68m	13' 3.95m	17.1' 5.22m	21' - 3" 6.48m	25' - 5" 7.75m	29' - 7" 9.01m	33' - 9" 10.28m	37' - 10" 11.54m	42' 12.81m	46' - 2" 14.08m
Illuminance = fc (Illuminance = lux)	292.37 (3,147.00)	129.94 (1,398.67)	73.09 (786.75)	46.78 (503.52)	32.49 (349.67)	23.87 (256.90)	18.27 (196.69)	14.44 (155.41)	11.69 (125.88)	9.66 (104.03)

ALTMAN Lighting
BRINGING IMAGINATION TO LIGHT

Photometric Performance - PHX 250W 5000K with 15-35 Degree Zoom Lens

Narrow

Throw Distance (d)	10' 3.05m	15' 4.57m	20' 6.09m	25' 7.62m	30' 9.14m	35' 10.67m	40' 12.19m	45' 13.72m	50' 15.24m	55' 16.76m
Beam Size Diameter	2' - 9" 0.85m	3'-11" 1.19m	5' 1.54m	6'- 2" 1.89m	7'- 4" 2.24m	8'- 6" 2.58m	9' - 7" 2.93m	10' - 9" 3.28m	11'- 11" 3.63m	13' 3.97m
Illuminance = fc (Illuminance = lux)	2,612.50 (28,110.50)	1,076.39 (11,581.98)	605.47 (6,514.86)	387.50 (4,169.51)	269.09 (2,895.49)	197.71 (2,127.30)	151.37 (1,628.72)	119.59 (1,286.89)	96.88 (1,042.38)	80.06 (861.47)

Medium

Throw Distance (d)	10' 3.05m	15' 4.57m	20' 6.09m	25' 7.62m	30' 9.14m	35' 10.67m	40' 12.19m	45' 13.72m	50' 15.24m	55' 16.76m
Beam Size Diameter	4' - 3" 1.30m	6' - 2" 1.88m	8' - 1" 2.46m	9'- 11" 3.03m	11' - 10" 3.61m	13' - 9" 4.18m	15' - 7" 4.76m	17' - 6" 5.34m	19' - 5" 5.91m	21' - 3" 6.49m
Illuminance = fc (Illuminance = lux)	1,121.00 (12,061.96)	464.05 (4,993.21)	261.03 (2,808.68)	167.06 (1,797.56)	116.01 (1,248.30)	85.23 (917.12)	65.26 (702.17)	51.56 (554.80)	41.77 (449.39)	34.52 (371.39)

Wide

Throw Distance (d)	10' 3.05m	15' 4.57m	20' 6.09m	25' 7.62m	30' 9.14m	35' 10.67m	40' 12.19m	45' 13.72m	50' 15.24m	55' 16.76m
Beam Size Diameter	5' - 10" 1.79m	8' - 6" 2.60m	11' - 2" 3.42m	13' - 11" 4.24m	16' - 7" 5.05m	19' - 3" 5.87m	21' - 11" 6.69m	24' - 7" 7.50m	27' - 3" 8.32m	29' - 11" 9.14m
Illuminance = fc (Illuminance = lux)	496.85 (5,346.11)	233.81 (2,515.78)	131.52 (1,415.13)	84.17 (905.68)	58.45 (628.94)	42.94 (462.08)	32.88 (353.78)	25.98 (279.53)	21.04 (226.42)	17.39 (187.12)

Photometric Performance - PHX 250W 5000K with 30-55 Degree Zoom Lens

Narrow

Throw Distance (d)	10' 3.05m	15' 4.57m	20' 6.09m	25' 7.62m	30' 9.14m	35' 10.67m	40' 12.19m	45' 13.72m	50' 15.24m	55' 16.76m
Beam Size Diameter	5' - 6" 1.69m	8' 2.45m	10' - 7" 3.22m	13' - 1" 3.98m	15' - 7" 4.75m	18 - 1" 5.52m	20' - 7" 6.28m	23' - 2" 7.05m	25' - 8" 7.82m	28' - 2" 8.58m
Illuminance = fc (Illuminance = lux)	723.16 (7,784.04)	321.40 (3,459.57)	180.79 (1,946.01)	115.71 (1,245.45)	80.35 (864.89)	59.03 (635.43)	45.20 (486.50)	35.71 (384.40)	28.93 (311.36)	23.91 (257.32)

Medium

Throw Distance (d)	10' 3.05m	15' 4.57m	20' 6.09m	25' 7.62m	30' 9.14m	35' 10.67m	40' 12.19m	45' 13.72m	50' 15.24m	55' 16.76m
Beam Size Diameter	7' - 1" 2.16m	10' - 5" 3.17m	13 - 8" 4.17m	17' 5.18m	20' - 3" 6.18m	23' - 7" 7.19m	26 - 11" 8.19m	30' - 2" 9.20m	33' - 6" 10.20m	36' - 9" 11.21m
Illuminance = fc (Illuminance = lux)	481.02 (5,177.71)	213.79 (2,301.20)	120.26 (1,294.43)	76.96 (828.43)	53.45 (575.30)	39.27 (422.67)	30.06 (323.61)	23.75 (255.69)	19.24 (207.11)	15.90 (171.16)

Wide

Throw Distance (d)	10' 3.05m	15' 4.57m	20' 6.09m	25' 7.62m	30' 9.14m	35' 10.67m	40' 12.19m	45' 13.72m	50' 15.24m	55' 16.764m
Beam Size Diameter	8' - 10" 2.68m	13' 3.95m	17.1' 5.22m	21' - 3" 6.48m	25' - 5" 7.75m	29' - 7" 9.01m	33' - 9" 10.28m	37' - 10" 11.54m	42' 12.81m	46' - 2" 14.08m
Illuminance = fc (Illuminance = lux)	343.18 (3,693.92)	152.52 (1,641.74)	85.79 (923.48)	54.91 (591.03)	38.13 (410.44)	28.01 (301.54)	21.45 (230.87)	16.95 (182.42)	13.73 (147.76)	11.34 (122.11)

ALTMAN Lighting
BRINGING IMAGINATION TO LIGHT

Photometric Performance - PHX 250W Tunable White (4200K) with 15-35 Degree Zoom Lens

Narrow (3K & 5.6K Channels at Full, 4200K)

Throw Distance (d)	10' 3.05m	15' 4.57m	20' 6.09m	25' 7.62m	30' 9.14m	35' 10.67m	40' 12.19m	45' 13.72m	50' 15.24m	55' 16.76m
Beam Size Diameter	2' - 9" 0.85m	3'-11" 1.19m	5' 1.54m	6'- 2" 1.89m	7'- 4" 2.24m	8'- 6" 2.58m	9' - 7" 2.93m	10' - 9" 3.28m	11'- 11" 3.63m	13' 3.97m
Illuminance = fc (Illuminance = lux)	2,121.42 (22,834.77)	9,42.85 (10,148.79)	530.36 (5,708.69)	339.43 (3,653.56)	235.71 (2,537.20)	173.18 (1,864.06)	132.59 (1,427.17)	104.76 (1,127.64)	84.86 (913.39)	70.13 (754.87)

Medium (3K & 5.6K Channels at Full, 4200K)

Throw Distance (d)	10' 3.05m	15' 4.57m	20' 6.09m	25' 7.62m	30' 9.14m	35' 10.67m	40' 12.19m	45' 13.72m	50' 15.24m	55' 16.76m
Beam Size Diameter	4' - 3" 1.30m	6' - 2" 1.88m	8' - 1" 2.46m	9'- 11" 3.03m	11' - 10" 3.61m	13' - 9" 4.18m	15' - 7" 4.76m	17' - 6" 5.34m	19' - 5" 5.91m	21' - 3" 6.49m
Illuminance = fc (Illuminance = lux)	889.16 (9,570.83)	395.18 (4,253.70)	222.29 (2,392.71)	142.27 (1,531.33)	98.80 (1,063.42)	72.58 (781.29)	55.57 (598.17)	43.91 (472.63)	35.57 (382.83)	29.39 (316.39)

Wide (3K & 5.6K Channels at Full, 4200K)

Throw Distance (d)	10' 3.05m	15' 4.57m	20' 6.09m	25' 7.62m	30' 9.14m	35' 10.67m	40' 12.19m	45' 13.72m	50' 15.24m	55' 16.76m
Beam Size Diameter	5' - 10" 1.79m	8' - 6" 2.60m	11' - 2" 3.42m	13' - 11" 4.24m	16' - 7" 5.05m	19' - 3" 5.87m	21' - 11" 6.69m	24' - 7" 7.50m	27' - 3" 8.32m	29' - 11" 9.14m
Illuminance = fc (Illuminance = lux)	518.47 (5,580.86)	230.44 (2,480.38)	129.62 (1,395.21)	82.96 (892.93)	57.61 (620.09)	42.32 (455.58)	32.40 (348.80)	25.60 (275.59)	20.74 (223.23)	17.14 (184.49)

Photometric Performance - PHX 250W Tunable White (3000K) with 15-35 Degree Zoom Lens

Narrow (3K Channel at Full, 3000K)

Throw Distance (d)	10' 3.05m	15' 4.57m	20' 6.09m	25' 7.62m	30' 9.14m	35' 10.67m	40' 12.19m	45' 13.72m	50' 15.24m	55' 16.76m
Beam Size Diameter	2' - 9" 0.85m	3'-11" 1.19m	5' 1.54m	6'- 2" 1.89m	7'- 4" 2.24m	8'- 6" 2.58m	9' - 7" 2.93m	10' - 9" 3.28m	11'- 11" 3.63m	13' 3.97m
Illuminance = fc (Illuminance = lux)	973.59 (10,479.65)	432.71 (4,657.62)	243.40 (2,619.91)	155.77 (1,676.74)	108.18 (1,164.40)	79.48 (855.48)	60.85 (654.97)	48.08 (517.51)	38.94 (419.18)	32.18 (346.43)

Medium (3K Channel at Full, 3000K)

Throw Distance (d)	10' 3.05m	15' 4.57m	20' 6.09m	25' 7.62m	30' 9.14m	35' 10.67m	40' 12.19m	45' 13.72m	50' 15.24m	55' 16.76m
Beam Size Diameter	4' - 3" 1.30m	6' - 2" 1.88m	8' - 1" 2.46m	9'- 11" 3.03m	11' - 10" 3.61m	13' - 9" 4.18m	15' - 7" 4.76m	17' - 6" 5.34m	19' - 5" 5.91m	21' - 3" 6.49m
Illuminance = fc (Illuminance = lux)	408.06 (4392.38)	181.36 (1952.16)	102.02 (1098.09)	65.29 (702.78)	45.34 (488.04)	33.31 (358.56)	25.50 (274.52)	20.15 (216.90)	16.32 (175.69)	13.49 (145.20)

Wide (3K Channel at Full, 3000K)

Throw Distance (d)	10' 3.05m	15' 4.57m	20' 6.09m	25' 7.62m	30' 9.14m	35' 10.67m	40' 12.19m	45' 13.72m	50' 15.24m	55' 16.76m
Beam Size Diameter	5' - 10" 1.79m	8' - 6" 2.60m	11' - 2" 3.42m	13' - 11" 4.24m	16' - 7" 5.05m	19' - 3" 5.87m	21' - 11" 6.69m	24' - 7" 7.50m	27' - 3" 8.32m	29' - 11" 9.14m
Illuminance = fc (Illuminance = lux)	237.94 (2,561.24)	105.75 (1,138.33)	59.49 (640.31)	38.07 (409.79)	26.44 (284.58)	19.42 (209.08)	14.87 (160.07)	11.75 (126.48)	9.52 (102.44)	7.87 (84.66)

Photometric Performance - PHX 250W Tunable White (5600K) with 15-35 Degree Zoom Lens

Narrow (5.6K Channel at Full, 5600K)

Throw Distance (d)	10' 3.05m	15' 4.57m	20' 6.09m	25' 7.62m	30' 9.14m	35' 10.67m	40' 12.19m	45' 13.72m	50' 15.24m	55' 16.76m
Beam Size Diameter	2' - 9" 0.85m	3'-11" 1.19m	5' 1.54m	6'- 2" 1.89m	7'- 4" 2.24m	8'- 6" 2.58m	9' - 7" 2.93m	10' - 9" 3.28m	11'- 11" 3.63m	13' 3.97m
Illuminance = fc (Illuminance = lux)	1,171.30 (12,607.83)	520.58 (5,603.48)	292.83 (3,151.95)	187.41 (2,017.25)	130.15 (1,400.87)	95.62 (1,028.21)	73.21 (787.98)	57.84 (622.60)	46.85 (504.31)	38.72 (416.78)

Medium (5.6K Channel at Full, 5600K)

Throw Distance (d)	10' 3.05m	15' 4.57m	20' 6.09m	25' 7.62m	30' 9.14m	35' 10.67m	40' 12.19m	45' 13.72m	50' 15.24m	55' 16.76m
Beam Size Diameter	4' - 3" 1.30m	6' - 2" 1.88m	8' - 1" 2.46m	9'- 11" 3.03m	11' - 10" 3.61m	13' - 9" 4.18m	15' - 7" 4.76m	17' - 6" 5.34m	19' - 5" 5.91m	21' - 3" 6.49m
Illuminance = fc (Illuminance = lux)	490.93 (5,284.37)	218.19 (2,348.61)	122.73 (1,321.09)	78.55 (845.5)	54.55 (587.15)	40.08 (431.37)	30.68 (330.27)	24.24 (260.95)	19.64 (211.37)	16.23 (174.69)

Wide (5.6K Channel at Full, 5600K)

Throw Distance (d)	10' 3.05m	15' 4.57m	20' 6.09m	25' 7.62m	30' 9.14m	35' 10.67m	40' 12.19m	45' 13.72m	50' 15.24m	55' 16.76m
Beam Size Diameter	5' - 10" 1.79m	8' - 6" 2.60m	11' - 2" 3.42m	13' - 11" 4.24m	16' - 7" 5.05m	19' - 3" 5.87m	21' - 11" 6.69m	24' - 7" 7.50m	27' - 3" 8.32m	29' - 11" 9.14m
Illuminance = fc (Illuminance = lux)	286.26 (3,081.37)	127.23 (1,369.50)	71.57 (770.34)	45.80 (493.02)	31.81 (342.37)	23.37 (251.54)	17.89 (192.58)	14.14 (152.16)	11.45 (123.25)	9.46 (101.86)

Photometric Performance - PHX 250W Tunable White (4200K) with 30-55 Degree Zoom Lens

Narrow (3K & 5.6K Channels at Full, 4200K)

Throw Distance (d)	10' 3.05m	15' 4.57m	20' 6.09m	25' 7.62m	30' 9.14m	35' 10.67m	40' 12.19m	45' 13.72m	50' 15.24m	55' 16.76m
Beam Size Diameter	5' - 6" 1.69m	8' 2.45m	10' - 7" 3.22m	13' - 1" 3.98m	15' - 7" 4.75m	18 - 1" 5.52m	20' - 7" 6.28m	23' - 2" 7.05m	25' - 8" 7.82m	28' - 2" 8.58m
Illuminance = fc (Illuminance = lux)	642.91 (6,920.22)	285.74 (3,075.65)	160.73 (1,730.05)	102.87 (1,107.23)	71.43 (768.91)	52.48 (564.91)	40.18 (432.51)	31.75 (341.73)	25.72 (276.80)	21.25 (228.76)

Medium (3K & 5.6K Channels at Full, 4200K)

Throw Distance (d)	10' 3.05m	15' 4.57m	20' 6.09m	25' 7.62m	30' 9.14m	35' 10.67m	40' 12.19m	45' 13.72m	50' 15.24m	55' 16.76m
Beam Size Diameter	7' - 1" 2.16m	10' - 5" 3.17m	13 - 8" 4.17m	17' 5.18m	20' - 3" 6.18m	23' - 7" 7.19m	26 - 11" 8.19m	30' - 2" 9.20m	33' - 6" 10.20m	36' - 9" 11.21m
Illuminance = fc (Illuminance = lux)	432.85 (4,659.21)	192.38 (2,070.76)	108.21 (1,164.80)	69.26 (745.47)	48.10 (517.69)	35.34 (380.34)	27.05 (291.20)	21.38 (230.08)	17.31 (186.36)	14.31 (154.02)

Wide (3K & 5.6K Channels at Full, 4200K)

Throw Distance (d)	10' 3.05m	15' 4.57m	20' 6.09m	25' 7.62m	30' 9.14m	35' 10.67m	40' 12.19m	45' 13.72m	50' 15.24m	55' 16.764m
Beam Size Diameter	8' - 10" 2.68m	13' 3.95m	17.1' 5.22m	21' - 3" 6.48m	25' - 5" 7.75m	29' - 7" 9.01m	33' - 9" 10.28m	37' - 10" 11.54m	42' 12.81m	46' - 2" 14.08m
Illuminance = fc (Illuminance = lux)	305.49 (3,288.27)	135.77 (1,461.45)	76.37 (822.06)	48.88 (526.12)	33.94 (365.36)	24.94 (205.51)	19.09 (162.38)	15.09 (162.38)	12.22 (131.53)	10.10 (108.70)

Photometric Performance - PHX 250W Tunable White (3000K) with 30-55 Degree Zoom Lens

Narrow (3K Channel at Full, 3000K)

Throw Distance (d)	10' 3.05m	15' 4.57m	20' 6.09m	25' 7.62m	30' 9.14m	35' 10.67m	40' 12.19m	45' 13.72m	50' 15.24m	55' 16.76m
Beam Size Diameter	5' - 6" 1.69m	8' 2.45m	10' - 7" 3.22m	13' - 1" 3.98m	15' - 7" 4.75m	18 - 1" 5.52m	20' - 7" 6.28m	23' - 2" 7.05m	25' - 8" 7.82m	28' - 2" 8.58m
Illuminance = fc (Illuminance = lux)	295.05 (3,175.92)	131.13 (1,411.52)	73.76 (793.98)	47.21 (508.14)	32.78 (352.88)	24.09 (259.25)	18.44 (198.49)	14.57 (156.83)	11.80 (127.03)	9.75 (104.98)

Medium (3K Channel at Full, 3000K)

Throw Distance (d)	10' 3.05m	15' 4.57m	20' 6.09m	25' 7.62m	30' 9.14m	35' 10.67m	40' 12.19m	45' 13.72m	50' 15.24m	55' 16.76m
Beam Size Diameter	7' - 1" 2.16m	10' - 5" 3.17m	13 - 8" 4.17m	17' 5.18m	20' - 3" 6.18m	23' - 7" 7.19m	26 - 11" 8.19m	30' - 2" 9.20m	33' - 6" 10.20m	36' - 9" 11.21m
Illuminance = fc (Illuminance = lux)	198.65 (2,138.27)	88.29 (950.34)	49.66 (534.56)	31.78 (342.12)	22.07 (237.58)	16.22 (174.55)	12.42 (133.64)	9.81 (105.59)	7.95 (85.53)	6.57 (70.68)

Wide (3K Channel at Full, 3000K)

Throw Distance (d)	10' 3.05m	15' 4.57m	20' 6.09m	25' 7.62m	30' 9.14m	35' 10.67m	40' 12.19m	45' 13.72m	50' 15.24m	55' 16.764m
Beam Size Diameter	8' - 10" 2.68m	13' 3.95m	17.1' 5.22m	21' - 3" 6.48m	25' - 5" 7.75m	29' - 7" 9.01m	33' - 9" 10.28m	37' - 10" 11.54m	42' 12.81m	46' - 2" 14.08m
Illuminance = fc (Illuminance = lux)	140.20 (1,509.10)	62.31 (670.71)	35.05 (377.27)	22.43 (241.45)	15.58 (167.67)	11.44 (123.19)	8.76 (94.31)	6.92 (74.52)	5.61 (60.36)	4.63 (49.88)

Photometric Performance - PHX 250W Tunable White (5600K) with 30-55 Degree Zoom Lens

Narrow (5.6K Channel at Full, 5600K)

Throw Distance (d)	10' 3.05m	15' 4.57m	20' 6.09m	25' 7.62m	30' 9.14m	35' 10.67m	40' 12.19m	45' 13.72m	50' 15.24m	55' 16.76m
Beam Size Diameter	5' - 6" 1.69m	8' 2.45m	10' - 7" 3.22m	13' - 1" 3.98m	15' - 7" 4.75m	18 - 1" 5.52m	20' - 7" 6.28m	23' - 2" 7.05m	25' - 8" 7.82m	28' - 2" 8.58m
Illuminance = fc (Illuminance = lux)	354.97 (3,820.88)	157.77 (1,698.16)	88.74 (955.22)	56.80 (611.34)	39.44 (424.54)	28.98 (311.90)	22.19 (238.80)	17.53 (188.68)	14.20 (152.83)	11.73 (126.31)

Medium (5.6K Channel at Full, 5600K)

Throw Distance (d)	10' 3.05m	15' 4.57m	20' 6.09m	25' 7.62m	30' 9.14m	35' 10.67m	40' 12.19m	45' 13.72m	50' 15.24m	55' 16.76m
Beam Size Diameter	7' - 1" 2.16m	10' - 5" 3.17m	13 - 8" 4.17m	17' 5.18m	20' - 3" 6.18m	23' - 7" 7.19m	26 - 11" 8.19m	30' - 2" 9.20m	33' - 6" 10.20m	36' - 9" 11.21m
Illuminance = fc (Illuminance = lux)	238.99 (2,572.50)	106.22 (1,143.33)	59.75 (643.12)	38.24 (411.60)	26.55 (285.83)	19.51 (210.00)	14.94 (160.78)	11.80 (127.03)	9.56 (102.90)	7.90 (85.04)

Wide (5.6K Channel at Full, 5600K)

Throw Distance (d)	10' 3.05m	15' 4.57m	20' 6.09m	25' 7.62m	30' 9.14m	35' 10.67m	40' 12.19m	45' 13.72m	50' 15.24m	55' 16.764m
Beam Size Diameter	8' - 10" 2.68m	13' 3.95m	17.1' 5.22m	21' - 3" 6.48m	25' - 5" 7.75m	29' - 7" 9.01m	33' - 9" 10.28m	37' - 10" 11.54m	42' 12.81m	46' - 2" 14.08m
Illuminance = fc (Illuminance = lux)	168.67 (1,815.56)	74.97 (806.91)	42.17 (453.89)	26.99 (290.49)	18.74 (201.72)	13.77 (148.20)	10.54 (113.47)	8.33 (89.65)	6.75 (72.62)	5.58 (60.01)

Product Dimensions

PHX250 15 - 35 Degree Zoom

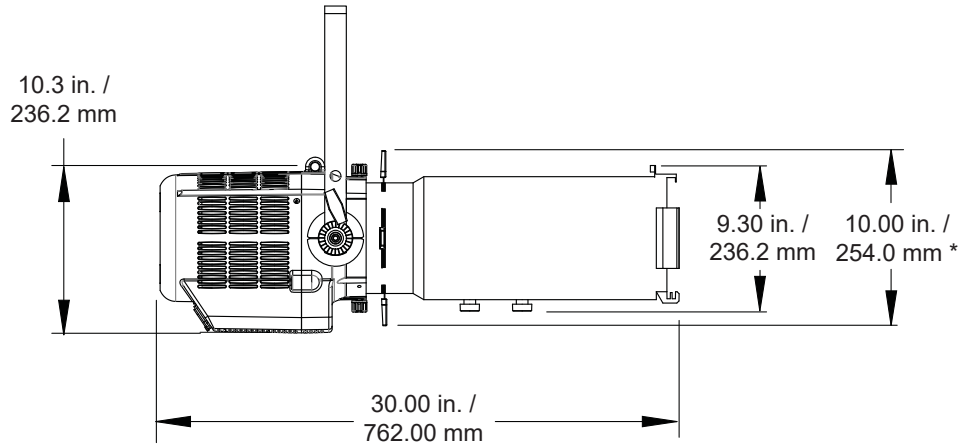

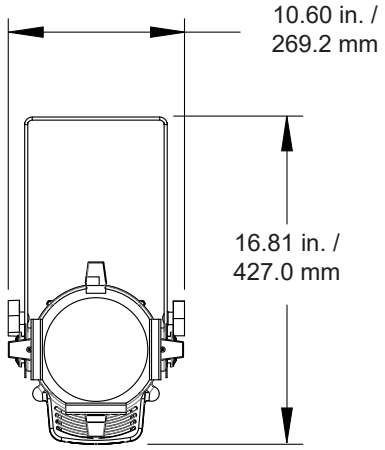

**Dimensions shown are with shutter blades fully retracted (pushed in).*

PHX250 30 - 55 Degree Zoom

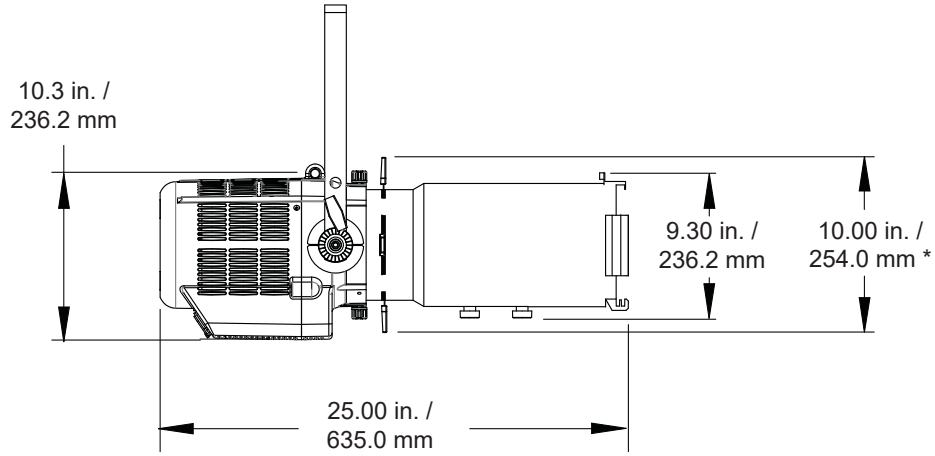

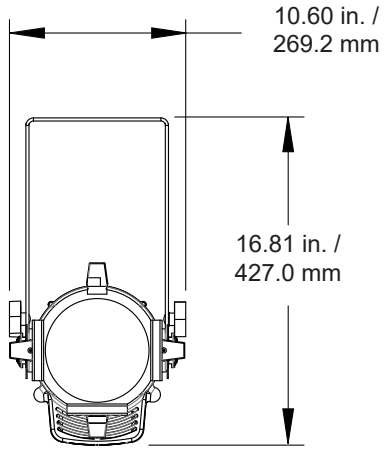

**Dimensions shown are with shutter blades fully retracted (pushed in).*

ALTMAN Lighting
BRINGING IMAGINATION TO LIGHT

Note: Drawings are not to scale.

Specifications

Materials:	Construction employs all corrosion-resistant materials and hardware.
Control:	DMX /RDM - DMX512 in/thru via 5-pin XLR connector. RDM ANSI E1.20 Compliant
Light Engines:	60 LED Array. Avaiable in RGBA, RGBW, 3000K, 5000K, and 3000K/5000K (Tunable White)
Input Voltages:	120VAC - 240VAC, 50/60 Hz, universal power input (PowerCON in/thru - up to 8 fixtures (20A Max) may be linked via PowerCON. Requires a non-dim source.
Cooling:	Active fan cooling
Environment:	-10 to 40 degrees C (-14 to 104 degrees F) / 5%-95% Non condensing
Weight:	28.25 lbs. (12.81 kg.)
Compliance:	cETLus Listed, CE marked (IP20 rated for indoor use)

Ordering Information

PHX2-(LED Array)-(Lens Type)-(Finish Color)

Model:	PHX2 (PHX 250W LED Zoom Spot)
LED Array:	RGBA (RGBA), RGBW (RGBW), 3K (3000K), 5K (5000K) or 3K5K (3000K/5000K Tunable White)
Lens Type:	15Z (15°-35° zoom) or 30Z (30°-55° zoom)
Body Color:	Black (B) or White (W)

Note: Each unit ordered includes a 7-1/2" x 7-1/2" Color Frame (6-CF), C-Clamp (510), 36" Black Safety Cable (SC-36-BK), PHX Soft Focus Lens with B-Size Pattern Holder (PHXZ-SFLGSB), and 5 Foot AC Cable PowerCON to Edison (PCL-PBG-12-).*

Optional Accessories

6-CF*	Color Frame, 71/2" x 71/2"
510	Malleable Iron Pipe Clamp
SC-36-BK	36" Black Safety Cable with Spring Clamp
PHXZ-SFLGSB	PHX Soft Focus lens with B Size Pattern Holder
PCL-PBG-12-*	5' 20A PowerCON with Parallel Blade U Ground (Edison)
510-HD	Heavy Duty Malleable Iron Pipe Clamp
6-DN	7-1/2" x 7-1/2" with 3" Hole Donut, Black
PHXZ-PHGSB	B Size Steel Pattern Holder (86mm OD/ 64.5mm IA)
PHXZ-PHGSB-3T	B Size Steel Pattern Holder (86mm OD/ 64.5mm IA) 3 Tab Style
PHX-PHISB	B Size Steel Pattern Holder (86mm OD/ 64.5mm IA) for Iris Slot
PHX-PHISA-GLS	A Size Glass Pattern Holder (100mm OD/75mm IA) for Iris Slot
PHX-PHISB-GLS	B Size Glass Pattern Holder (82mm OD/ 64.5mm IA) for Iris Slot
PHX-PHIS86-GLS	B Size Glass Pattern Holder (86mm OD/ 64.5mm IA) for Iris Slot
PCL-2P&G-12-5-*	5' 20A PowerCON with 2P&G Stage Pin Connector, Male
PCL-TLG-12-5-*	5' 20A PowerCON with L5-20P Twist Locking Ground Connector, Male
PCL-BARE-12-5-*	5' 20A PowerCON with Bare End Lead

*Note: *=W for White Cable, Black is standard and no suffix is required*

Altman Lighting
57 Alexander Street
Yonkers, New York 10701
1.914.476.7987 (Main)
1.914.963.7304 (Fax)
www.altmanlighting.com

All specifications, descriptions, information, design, etc. contained in this document are subject to change without prior notice.
27 March 2018
© 2018 Altman Stage Lighting, Inc.