PLATINUM SBX™

SKU# **EPB600**

The new Platinum SBX™ is an innovative full featured patent pending design 3-in-1 illuminare which can be utilized as a beam, spot, or wash fixture, featuring the brand new Phillips™ MSD Platinum 17 RA 350W, 6,900K, 85CRI lamp, 15,000 total lumens delivering comparable output to 700W fixtures, 3° to 18° zoom in beam mode and 5° to 30° zoom in spot mode, 10 dichroic colors including UV, CTO, CTB, plus white (open), 8 rotating-interchangeable and 12 static-stamped gobos, beam shaper and rotating 8-facet prisms, frost filter, Art-NET (DMX Over Ethernet) support, 5pin DMX in/out, RJ45 Ethernet in/out, and powerCON in/out connections, (6) button control full color 180° reversible menu display, 550W max power consumption, and a multi-voltage universal auto switching power supply (100-240v).

FEATURES

Patent Pending Beam, Spot, and Wash 3-in-1 Illuminare

3° - 18° Beam and 5° - 30° Spot Zoom

New Phillips™ MSD Platinum 17 RA 350W Lamp

15,000 Total Lumens, 6,900K, 85CRI, 1,500 Hours

Comparable Output To 700W Fixtures With No LUX Loss

10 Dichroic Colors Including UV, CTO and CTB

8 Rotating Interchangable and 12 Static-Stamped Gobos

Beam Shaper and Rotating 8-Facet Prisms, Frost Filter

Art-NET (DMX Over Ethernet) Support

Intertek
4010832

Specifications are subject to change without notice ©Elation Professional 8/19/15

Elation Professional USA | 6122 S. Eastern Ave. | Los Angeles, CA. 90040
323-582-3322 | 323-832-9142 fax | www.elationlighting.com | info@elationlighting.com

Elation Professional B.V. | Junostraat 2 | 6468 EW Kerkrade, Netherlands
+31 45 546 85 66 | +31 45 546 85 96 fax | www.elationlighting.eu | info@elationlighting.eu

PRODUCT SPECIFICATIONS

SOURCE
Phillips™ MSD Platinum 17 RA 350W Lamp
1,500 Hour Average Lamp Life

PHOTOMETRIC DATA
15,000 Total Lumens, 6,900K, 85CRI
107.000 LUX 9,940 FC @49.2' (15m) (3° Beam Full ON)
5,133 LUX 477 FC @49.2' (15m) (5° Spot Full ON)

EFFECTS
Beam Shaping and 8-Facet Prisms and (16) Macros
Frost Filter
Strobe: 1-18fps
Dimming: 0% - 100%

COLOR
10 Dichroic Colors Including UV, CTB, CTO, + White

GOBOS
(2) Gobo Wheels
(8) Interchangeable-Rotating / Indexing Glass Gobos
(12) Static-Stamped Metal Gobos

CONTROL / CONNECTIONS
(3) DMX Channel Modes (16 / 18 / 25)
RDM (Remote Device Management)
6 Button Touch Control Panel
Full Color 180° Reversible LCD Menu Display
8 / 16 Bit Resolution Adjustable Movement
5pin DMX In/Out
RJ45 Ethernet In/Out (Art-NET)
powerCON Power In/Out

SIZE / WEIGHT
Length: 14.1" (359mm)
Width: 19.7" (502mm)
Vertical Height: 28.7" (730mm)
Weight: 73.0 lbs. (33.1 kg)

ELECTRICAL / THERMAL
AC 100-240V - 50/60Hz
550W Max Power Consumption
14°F to 113°F (-10°C to 45°C)

APPROVALS / RATINGS
CE | cETLus | IP20

INSTALLATION
Rigging: Clamps (Not Included)
Working Position: Flat Surface / Inverted (180°)

INCLUDED ITEMS
(2) Omega Brackets, (1) 5pin DMX
(1) Safety Cable, (1) powerCON Cable

OPTIONAL ACCESSORIES

ORDER CODE	ITEM
TRIGGER CLAMP	Heavy Duty Wrap Around Hook Style Clamp
DRCSBXTOUR	Dual Split Road Case For Platinum SBX™
EWDMXSYSTEM	Wireless DMX System (1 Transmitter, 1 Receiver)
AC5PDMX5PRO	5 ft. (1.5m) 5pin PRO DMX Cable
PLC3	3' (1m) PowerCON PRO Link Cable
CAT6PRO5	5' (1.5m) CAT6 EtherCON Cable
	Additional cable lengths available

PHOTOMETRIC DATA

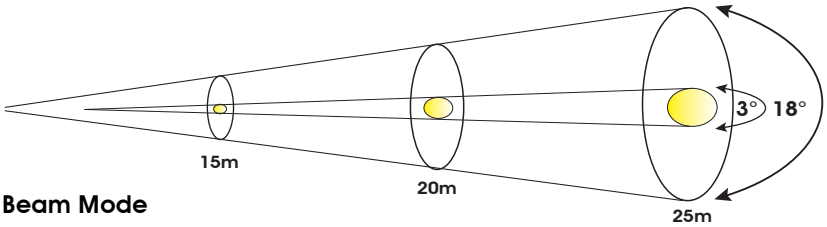

Beam Mode

Distance	15m	49.2 ft	20m	65.6 ft	25m	82 ft
3° MIN Diameter	0.84	2.8	1.12	3.7	1.4	4.6
18° MAX Diameter	4.76	15.6	6.34	20.8	7.93	26.0
Photometrics	lux	fc	lux	fc	lux	fc
3° MIN FULL ON	107,000	9,940	64,220	5,966	41,960	3,898
18° MAX FULL ON	4,147	385	2,435	226	1,620	150

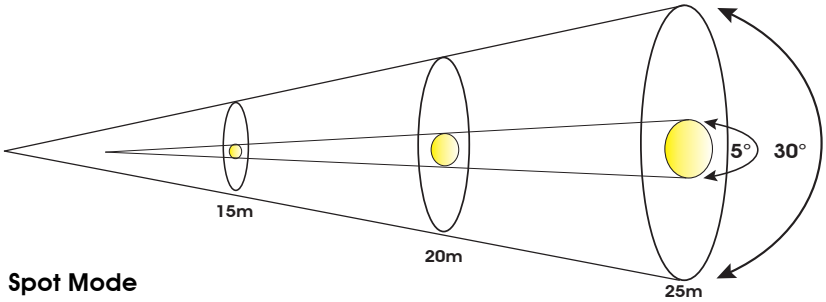

Spot Mode

Distance	15m	49.2 ft	20m	65.6 ft	25m	82 ft
5° MIN Diameter	1.38	4.5	1.84	6.0	2.3	7.5
30° MAX Diameter	7.88	25.9	10.5	34.4	13.13	43.1
Photometrics	lux	fc	lux	fc	lux	fc
5° MIN FULL ON	5,133	477	2,953	274	1,970	183
30° MAX FULL ON	210	20	125	12	85	8

COLORS AND GOBOS

COLOR WHEEL

RED	BLUE	GREEN	YELLOW	MAGENTA	CYAN	ORANGE	UV FILTER	CTO	CTB
Pos. 1	Pos. 2	Pos. 3	Pos. 4	Pos. 5	Pos. 6	Pos. 7	Pos. 8	Pos. 9	Pos. 10

INTERCHANGEABLE-ROTATING GOBO WHEEL 1 - OD: Ø16.1mm**

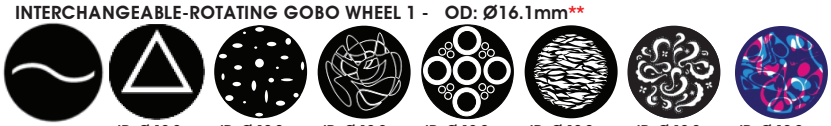

ID: Ø 10.0mm	ID: Ø 10.0mm	ID: Ø 10.0mm	ID: Ø 10.0mm	ID: Ø 10.0mm	ID: Ø 10.0mm	ID: Ø 10.0mm	ID: Ø 10.0mm
Pos. 1	Pos. 2	Pos. 3	Pos. 4	Pos. 5	Pos. 6	Pos. 7	Pos. 8

STATIC-STAMPED GOBO WHEEL 2

Pos. 1	Pos. 2	Pos. 3	Pos. 4	Pos. 5	Pos. 6	Pos. 7	Pos. 8	Pos. 9	Pos. 10	Pos. 11	Pos. 12

****IMPORTANT NOTICE REGARDING GOBO DIMENSIONS AND CUSTOM GOBOS**
OD = Outside Diameter | ID = Image Diameter
Due to varying manufacturing processes, it is highly recommended to provide a gobo and holder sample from the fixture to 3rd party custom gobo vendors for accurate sizing.

DIMENSIONAL DIAGRAMS

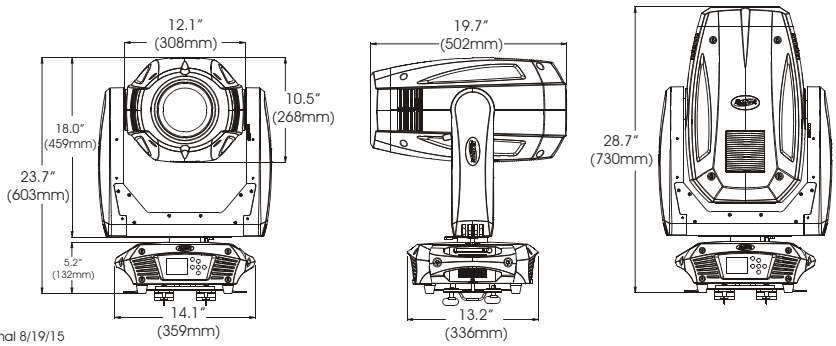

Elation Professional USA | 6122 S. Eastern Ave. | Los Angeles, CA. 90040
323-582-3322 | 323-832-9142 fax | www.elationlighting.com | info@elationlighting.com

Elation Professional B.V. | Junostraat 2 | 6468 EW Kerkrade, Netherlands
+31 45 546 85 66 | +31 45 546 85 96 fax | www.elationlighting.eu | info@elationlighting.eu